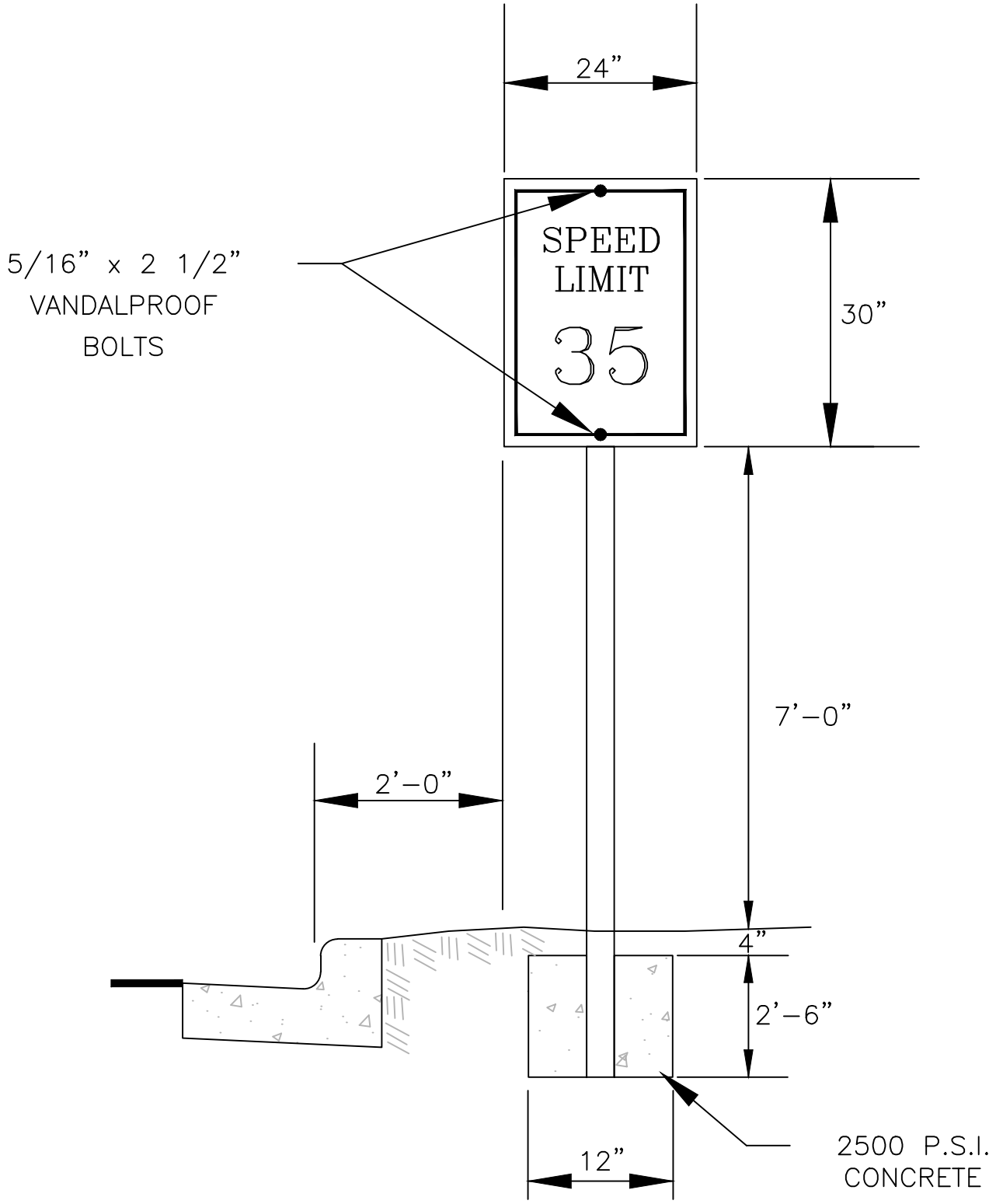

NOT TO SCALE

BACKGROUND: WHITE, ENGINEER GRADE REFLECTIVE SHEETING
LEGEND AND BORDER: BLACK

North Augusta
South Carolina's Riverfront
PUBLIC WORKS & ENGINEERING

DATE	BY	DESCRIPTION
6/21/23	BGM	CHANGE FONT, TITLE BLOCK

7.06

TYPICAL SPEED LIMIT SIGN